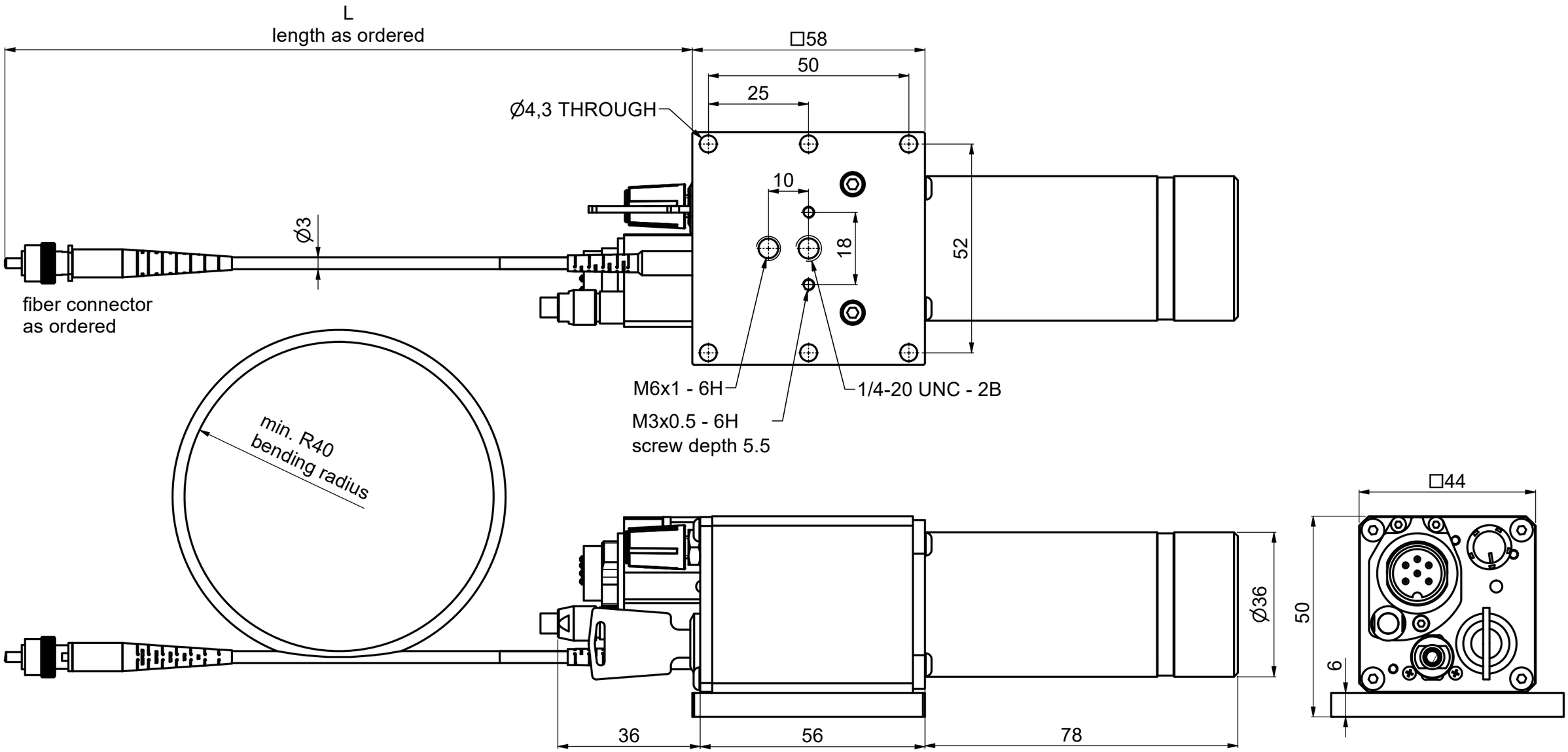

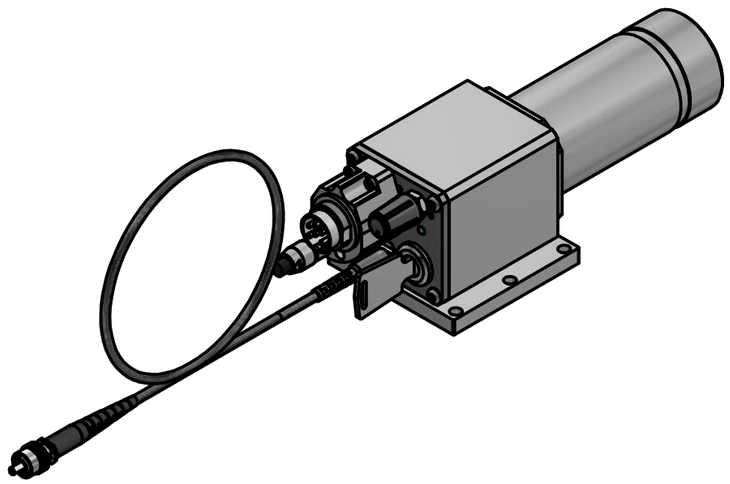

For information only
Not for manufacturing purposes

Dimensions DIN EN ISO 14405			Scale: 1:1
	Date	Name	51nano-S
editor	26.02.2020	Lamott	dimensions
exam.			Customer Drawing
free			
Schäfter+Kirchhoff GmbH OPTICS, METROLOGY, AND PHOTONICS			0008-2900-1100 — Sice: A3 — Page: 1
File: 000829001100.idw			Model: 000829001100.iam